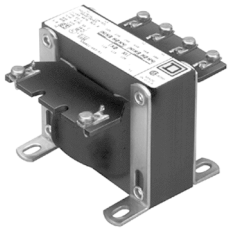

Type EO3D1

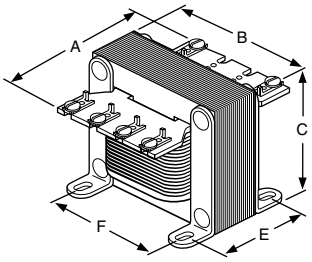

Figure 4

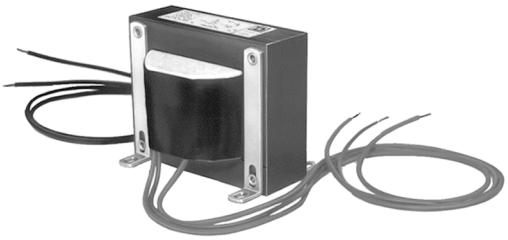

Type EL and KL with Leads

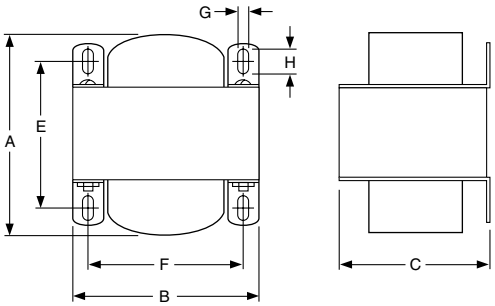

Figure 5

Type E

Type	VA		Dimensions - See Figure 4						Weight (lbs)
	60 Hz	50 Hz	A	B	C	E	F	Slot	
EO17	25	25	3.31	3.00	2.50	1.75	2.50	.20 x .38	1.9
EO1	50	35	3.31	3.00	2.50	2.00	2.50	.20 x .38	2.2
EO18	75	75	3.78	3.38	2.81	2.19	2.81	.20 x .38	3.5
EO2	100	70	3.78	3.38	2.81	2.38	2.81	.20 x .38	3.8
EO3	150	120	4.44	3.75	3.13	2.88	3.13	.20 x .38	6.0
EO4	300	240	5.56	4.50	3.75	3.25	3.75	.20 x .38	10.5
EO16	350	280	6.19	4.50	3.75	3.81	3.75	.20 x .38	13.2
EO51	500	400	6.56	5.25	4.38	3.81	4.38	.28 x .41	17.2
EO61	750	500	7.94	5.25	4.38	5.13	4.38	.28 x .41	24.5
EO71	1000	900	7.94	6.00	5.00	4.75	5.00	.28 x .63	30.5
EO81	1500	1300	8.59	7.06	6.03	5.88	5.81	.44 x .69	45.0
EO91	2000	1800	9.22	7.06	6.03	6.50	5.81	.44 x .69	56.0
EO10	3000	3000	9.44	9.00	8.38	5.88	7.63	.44 x .69	72.0
EO11	5000	5000	12.06	9.00	8.38	8.50	7.63	.44 x .69	115.0

Type E Stocked Voltages

Type	VA		Stocked Voltage Codes	Price
	60 Hz	50 Hz		
EO17	25	25	D1, D2, D3	**$ 35.80**
EO1	50	35	D1, D2, D7	**45.00**
EO18	75	75	D1, D2	**52.00**
EO2	100	70	D1, D2	**62.00**
EO3	150	120	D1, D7	**70.00**
EO4	300	240	D1, D5, D7	**126.00**
EO16	350	280	D1, D2	**134.00**
EO51	500	400	D1, D5, D6	**152.00**
EO61	750	500	D1, D5	**215.00**
EO71	1000	900	D1, D5	**247.00**
EO81	1500	1300	D1	**379.00**
EO91	2000	1800	D1	**459.00**
EO10	3000	3000	D1	**662.00**
EO11	5000	5000	D1	**1009.00**

Transformers with Leads

Transformers with leads, instead of screw terminals, are available. See the following chart for VA sizes and voltage combinations. Consult your nearest Square D/Schneider Electric sales office for further details. Lead length is 25".

Type	VA	Voltage	Price
EL1D9	50	480-120	**$ 70.00**
EL2D9	100	480-120	**94.00**
EL3D9	150	480-120	**107.00**
KL300D9	300	480-120	**174.00**

Class 9070 Type EL, KL

Type	Weight (lbs.)	Dimensions – See Figure 5						
		A	B	C	E	F	G	H
EL1	2.2	2 5/8	3	2 1/2	2	2 1/2	13/64	3/8
EL2	3.8	3	3 3/8	2 13/16	2 3/8	2 13/16	13/64	3/8
EL3	6.0	3 5/8	3 3/4	3 1/8	2 7/8	3 1/8	13/64	3/8
KL300	8.0	3 1/2	4 1/2	3 3/4	2 9/16	3 3/4	13/64	3/8

Separate NEMA Type 1 Enclosures for Transformers

Class 9991 Type	For Use With
UE7	EO1, EO17, T50
LG1	EO2, EO3, EO4, EO15, EO16, EO18, EO19, T75, T100, T150, T200, T250, T300, T350, T500
SDG4	EO51, EO61, T750, T1000, EO71

User must drill mounting holes. Refer to pages 13-105 and 13-106 for dimensions.

How to Order:

To Order Specify:	Catalog Number		
	Class	Type	Voltage Code
● Class Number ● Type Number ● Voltage Code	9070	E051	D1

© 2001 Schneider Electric
all rights reserved

Industrial Control Transformers
Class 9070

Square D manufactures two types of industrial control transformers – a global type and a high regulation type.

- The Type T unit is designed for the global market and is the best choice when size and cost are of concern. This is our most popular and complete offering of industrial control transformers. Also available are the Type TF units with factory installed primary and secondary fuse blocks. The Type T and TF offering is 50/60 Hz rated and includes customer installable accessories such as FINGERSAFE® covers, fuse pullers, fuse blocks, and fuse clips.
  As part of the Type T designs are MultiTap™ units having a variety of primary voltages on just one transformer. Our new Universal Control Transformer will provide 120 V, or near 120 V, power from all common primary voltages, 208 through 600 V, and is listed as voltage code D50.
- The Type E unit is our high regulation design with exceptional voltage regulation. These control transformers are constructed using traditional materials and manufacturing techniques. When exceptional regulation and very low temperature rise are an absolute necessity, choose the Type E units.

Selection Guide

1. Determine inrush and sealed VA of each coil in the control circuit and VA of all other components
2. Total all sealed VA of all operating coils and other loads VA (Determines minimal VA size required for the circuit)
3. Total the inrush VA of all coils that are starting at the same time and all loads and coils that are running (using the regulation chart to give possible units to be used)
4. Take VA size from step two, go to standard VA size in chart. Make sure inrush VA from chart is greater than total VA from step three. (If not go to next larger VA size and repeat)

If your supply voltage is stable and fluctuates less than 5% we recommend you use the 90% secondary voltage column. If your supply voltage is not stable and fluctuates more than 10% we recommend you use the 95% secondary voltage column. We recommend that you never use the 85% secondary voltage column since magnetic devices lose life expectancy if they are continuously started at 85% of rated voltage.

For complete technical specification and selection data use the Square D Fax-on-Demand system.
Dial 1-800-557-4556, follow prompts, and request document code 1348, or order catalog 9070CT9901.

Triple Rated Voltage Codes

Voltage Code	Primary Voltage	Secondary Voltage
D1	240 x 480 230 x 460 220 x 440	120 115 110
D5	600 575 550	120 115 110
D12	480 460 440	240 230 220
D24	120 115 110	120 115 110
D31	240 x 480 230 x 460 220 x 440	120/240 115/230 110/220
D32	240/480/600 230/460/575 220/440/550	99/120 95/115 91/110
D37	600 575 550	120/240 115/230 110/220
D50	240/416/480/600 230/400/460/575 220/380/440/550 208/500	99/120/130 95/115/125 91/110/120 85/100/110
D55	120 x 240 115 x 230 110 x 220	120/240 115/230 110/220
D62	600 575 550	240 230 220
D95	208/240/480 200/230/460 220/440	120 115 110

Regulation Chart for Type T

VA	Inrush VA @ 20% power factor			Inrush VA @ 40% power factor		
	95% Secondary Voltage	90% Secondary Voltage	85% Secondary Voltage	95% Secondary Voltage	90% Secondary Voltage	85% Secondary Voltage
25	221	298	375	171	240	311
50	193	266	339	151	215	282
75	271	396	520	210	318	430
100	339	499	659	266	404	549
150	666	893	1120	529	731	942
200	588	815	1041	459	659	866
250	1416	1910	2388	1057	1494	1936
300	1634	2184	2709	1194	1681	2169
350	1894	2592	3261	1392	2005	2621
500	3197	4104	4981	2374	3195	4019
750	3770	5515	7231	2887	4391	5945
1000	6587	9079	11430	4706	6886	9051
1500	19324	23983	28607	15066	19361	23756
2000	31384	38777	46161	24794	31630	38667
3000	26539	39934	52713	19355	30721	42216
5000	53111	85265	116277	39368	66309	93882

Regulation Chart for Type E

VA	Inrush VA @ 20% power factor			Inrush VA @ 40% power factor		
	95% Secondary Voltage	90% Secondary Voltage	85% Secondary Voltage	95% Secondary Voltage	90% Secondary Voltage	85% Secondary Voltage
25	95	. . .	146	60	. . .	119
50	164	213	277	123	168	225
75	387	487	622	284	375	798
100	479	606	770	346	463	613
150	755	1177	1532	567	930	1252
200	1260	1883	2419	910	1462	1950
250	1530	2327	2995	1115	1811	2419
300	2030	2981	3800	1455	2290	3038
350	2920	4586	5981	2180	3637	4903
500	4230	5984	7707	3120	4661	6229
750	7430	11460	14736	5380	8907	11891
1000	10300	16873	21734	7450	13145	17571
1500	19200	30042	39217	14500	23859	32179
2000	27750	45194	60022	21750	36901	50334
3000	31800	82333	108205	26750	66072	89509
5000	86100	148768	202077	72600	126887	175552

Listing	File	Type
UL	E61239	T25-T5000, EO17-EO11
cUL	E61239	T1500-T5000
CSA	LR37055, Guide 184-N-90	T25-T1000, EO17-EO11
EN (CE)	947923, EN 60742/01.89 (TUV ref: 00941-RAG/sg E9371495E01)	T25-T200
	9579078, EN 60742/01.89 (TUV ref: 00941-RAG/sg E9471921.02E01)	T250-T1000
	9579078, EN 60742/01.89 (TUV ref: 00941-RAG/sg E9471921.02E01)	T1500-T5000

FINGERSAFE is a Registered Trademark of Square D Company or related companies.
MultiTap is a Trademark of Square D Company or related companies.

© 2000 Square D
All Rights Reserved