Test Indicators

708, 708M, 709, 709M Dial Test Indicators with Dovetail Mounts

.020", .060"/0.2MM, 0.8MM

These precision test indicators offer an easy to read angled head and the flexibility of three dovetail mounts. Features include:

- Large 1-3/8" (35mm) dial diameter with angled head
- Precision gear-driven design with smooth, jeweled movement
- Replaceable contact point reverses automatically, always maintaining clockwise hand rotation
- Satin chrome finish for durability
- Contacts are frictionally adjustable and replaceable
- Revolution count hand on 708B and 709B models
- Meet or exceed ISO accuracy specification

708BZ R708AZ

709BCZ

Individual Carbide Contact Points‡

Fits Models	Length Inch	Length mm	Ball Diameter Inch	Ball Diameter mm	Part No.	EDP
.0001", .0005", 0.01mm Reading Models	13/16"	20mm	.040"	1mm	PT23942	65255
			.078"	2mm	PT23914†	64222
			.120"	3mm	PT23943	65256
.0001", .0005", 0.01mm Reading Models	1-23/64"	34.4mm	.078"	2mm	PT27024†	66239
.0001", .0005", 0.01mm Reading Models	1-5/64"	28.4mm	.078"	2mm	PT25577†	67294
0.002mm Reading Models Only	5/8"	16mm	.078"	2mm	PT23953†	65868

† PT23914, PT27024, PT25577 and PT23953 furnished as standard.
‡ Length of carbide contacts must be the same as contacts normally furnished.

708, 709 Dial Test Indicators with dovetail mounts

Grad	Range	Dial Reading	Carbide Contact Point Length	Carbide Contact Point Ball Dia.	Description	Dial Color	Cat. No.	EDP	With SLC** Cat. No.	With SLC** EDP
.0001"	.010"	0-5-0	13/16" (20mm)	.078" (2mm)	Without Attachments	White	708AZ	64212	708AZ W/SLC	66866
						Red	R708AZ	64603	R708AZ W/SLC	66867
						Black	B708AZ	64607	B708AZ W/SLC	66868
					With Attachments*	White	708ACZ	64217	708ACZ W/SLC	66869
						Red	R708ACZ	64604	R708ACZ W/SLC	66870
						Black	B708ACZ	64608	B708ACZ W/SLC	66871
.0001"	.020"	0-5-0	13/16" (20mm)	.078" (2mm)	Without Attachments	White	708BZ	64213	708BZ W/SLC	66874
					With Attachments*		708BCZ	64218	708BCZ W/SLC	66875
.0005"	.030"	0-15-0	13/16" (20mm)	.078" (2mm)	Without Attachments	White	709AZ	64214		
						Red	R709AZ	64605		
						Black	B709AZ	64609		
					With Attachments*	White	709ACZ	64219		
						Red	R709ACZ	64606		
						Black	B709ACZ	64610		
.0005"	.050"	0-25-0	1-23/64" (34.4mm)	.078" (2mm)	Without Attachments	White	709ALZ	65857		
					With Attachments*		709ALCZ	65858		
.0005"	.060"	0-15-0	13/16" (20mm)	.078" (2mm)	Without Attachments	White	709BZ	64215		
					With Attachments*		709BCZ	64220		
708M, 709M Dial Test Indicators with dovetail mounts										
0.002mm	0.2mm	0-100-0	5/8" (16mm)	.078" (2mm)	Without Attachments	Yellow	708MAZ	65864	708MAZ W/SLC	66872
					With Attachments*		708MACZ	65865	708MACZ W/SLC	66873
0.01mm	0.8mm	0-40-0	13/16" (20mm)	.078" (2mm)	Without Attachments	Yellow	709MAZ	64216		
					With Attachments*		709MACZ	64221		
0.01mm	1.0mm	0-50-0	1-5/64" (28.4mm)	.078" (2mm)	Without Attachments	Yellow	709MALZ	67092		
					With Attachments*		709MALCZ	67093		

* Attachments include dovetail body clamp (PT22429/EDP 72441), tool post holder (PT11770A/EDP 71361), swivel post snug with dovetail indicator clamp (PT22428/EDP 72440), and snug and rod unit (Inch: PT22430/EDP 72442 or Millimeter: PT27171/EDP 66457).
** Includes redemption card for Standard Letter of Certification

Test Indicators

811, 811M Dial Test Indicators with Swivel Head

.060", 0.8MM

These are some of the most versatile and unique indicators available, the swivel head feature allows positioning to suit your line of sight from horizontal to vertical and at any angle up to 90º.

- Two positioning mounts work with dovetail test indicator accessories
- Contacts are frictionally adjustable and replaceable
- Contact point reverses, always maintaining clockwise hand rotation
- Contacts also available individually in steel, carbide, and different sizes
- Smooth, jeweled movement
- Large, 1-3/8" (35mm) dial diameter for increased readability
- Inch reading indicators are available with white, red, or black dials – metric indicators with yellow dials

811-5PZ

R811-1PZ

B811-5PZ

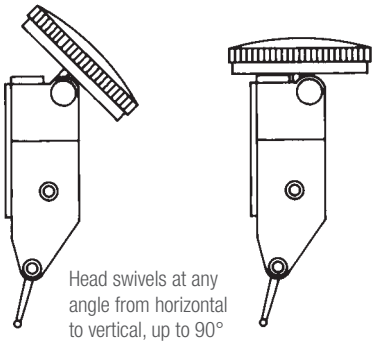
Head swivels at any angle from horizontal to vertical, up to 90°

Individual Contact Points for 811 and 811M Dial Test Indicators with Swivel Head

Fits 811 Models	Length Inch	Length mm	Ball Diameter Inch	Ball Diameter mm	Material	Part No.	EDP
.0005" and 0.01mm Reading Only	5/8"	16mm	.032"	0.8mm	Steel	PT23062	72451
					Carbide	PT23062X	72452
			.078"	2mm	Steel	PT22315	72443
					Carbide	PT22315X	72453
.001" Reading Only	1-5/16"	33mm	.032"	0.8mm	Steel	PT23064	72454
					Carbide	PT23064X	72455
			.078"	2mm	Steel	PT23011	72444
					Carbide	PT23011X	72456

811, Dial Test Indicators with Swivel Head

Graduation	Range	Dial Reading	Steel Contact Points Length Inch (mm)	Steel Contact Points Ball Dia. Inch (mm)	Description	Dial Color	Cat. No.	EDP
.0005"	.030"	0-15-0	5/8" (16mm)	.078" (2mm)	In Case without Attachments	White	811-5PZ	57080
						Black	B811-5PZ	63262
						Red	R811-5PZ	63266
					In Case with Attachments*	White	811-5CZ	57079
						Black	B811-5CZ	63261
						Red	R811-5CZ	63265
.001"	.060"	0-30-0	1-5/16" (33mm)	.078" (2mm)	In Case without Attachments	White	811-1PZ	57082
						Black	B811-1PZ	63264
						Red	R811-1PZ	63268
					In Case with Attachments*	White	811-1CZ	57081
						Black	B811-1CZ	63263
						Red	R811-1CZ	63267
811M Dial Test Indicators with swivel head								
0.01mm	0.8mm	0-40-0	5/8" (16mm)	.078" (2mm)	In Case without Attachments	Yellow	811-MPZ	57084
					In Case with Attachments*		811-MCZ	57083

* Attachments include dovetail body clamp (PT22429/EDP 72441), tool post holder (PT11770A/EDP 71361), swivel post snug with dovetail indicator clamp (PT22428/EDP 72440), and snug and rod unit (Inch: PT22430/EDP 72442 or Millimeter: PT27171/EDP 66457).

Test Indicators

711, 711M Last Word® Dial Test Indicators

.030", 0.7MM

The venerable Last Word Dial Test Indicator is among the most versatile available. Their small size and variety of attachments will handle all jobs with ease and accuracy. A very useful feature is the shaded dial – when used with a mirror, such as in a jig bore application, the operator will always know what the correct reading is.

Individual Contact Points (Fit All 711 Models)

Length		Ball Diameter				
Inch	mm	Inch	mm	Material	Part No.	EDP
5/32"	4mm	.035"	0.9mm	Steel	PT07137	70945
		.062"	1.6mm		PT07136	70944
		.120"	3mm		PT07087	70912
5/32"	4mm	.035"	0.9mm	Carbide	PT07137X	52964
		.062"	1.6mm		PT07136X	52965
		.120"	3mm		PT07087X	52966

Other features include:

- Ideal for precise measurements in all machining, layout, and inspection work
- Smooth, jeweled lever action
- Positive reversing switch
- Hard chrome-plated ratchet contact point
- Swiveling tubular body
- Easy reading dials, half yellow for clarity
- Variety of attachments available to suit the application.
- Indicators having "C" in the catalog number are furnished with 3 interchangeable steel contact points. All other indicators are furnished with one interchangeable steel contact point, PT07087. Carbide points available as listed.

711 Last Word® Dial Test Indicators

Graduation	Range	Dial Reading	Steel Contact Points Length	Steel Contact Points Ball Diameter	Description	Cat. No.	EDP
.001"	.030"	0-15-0	5/32" (4mm)	One: .120" (3mm)	Indicator with Universal Shank Complete with Long and Short Arm, Body Clamp	711FSAZ	52925
					Indicator with Gooseneck Shank	711FSBZ	52927
					Indicator with Body Clamp Only	711FSZ	52929
					Indicator with Universal Friction Holder with Shank	711GPSZ	52944
				Three: .035" (0.9mm) .062" (1.6mm) .120" (3mm)	Indicator Complete with All Attachments*	711GCSZ	52943
.0005"	.030"	0-15-0	5/32" (4mm)	One: .120" (3mm)	Indicator with Universal Shank Complete with Long and Short Arm, Body Clamp	711HSAZ	52951
					Indicator with Body Clamp Only	711HSZ	52953
					Indicator with Universal Friction Holder with Shank	711LPSZ	52958
				Three: .035" (0.9mm) .062" (1.6mm) .120" (3mm)	Indicator Complete with All Attachments*	711LCSZ	52957

711M Last Word® Dial Test Indicators

0.01mm	0.7mm	0-35-0	5/32" (4mm)	One: .120" (3mm)	Indicator with Universal Shank Complete with Long and Short Arm, Body Clamp	711MFSAZ	52926
					Indicator with Body Clamp Only	711MFSZ	52930
					Indicator with Universal Friction Holder with Shank	711MGPSZ	52946
				Three: .035" (0.9mm) .062" (1.6mm) .120" (3mm)	Indicator Complete with All Attachments*	711MGCSZ	52945

* Attachments include 3 contact points – body clamp – universal friction holder with shank – universal shank complete with long and short arm – double-jointed attachment – height gage attachment – surface gage attachment – coupling with 3/16" (4.8mm) hole.

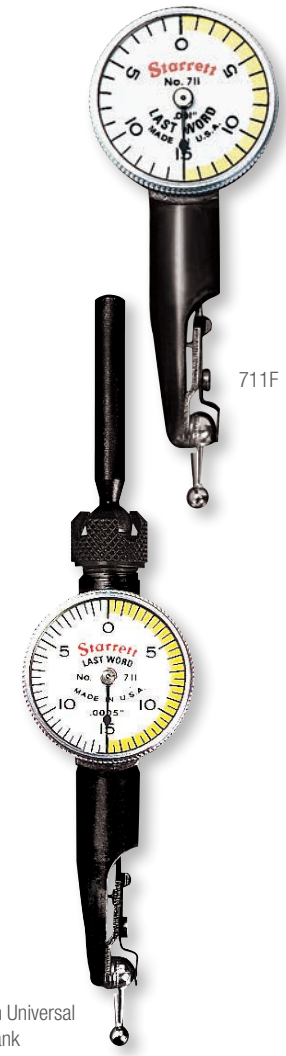

711F

711LPSZ Indicator with Universal Friction Holder and Shank

Test Indicators

3808, 3809, 3908 and 3909 Dial Test Indicators

These dial test indicators are offered with choices of dial size, range and include accessories.

All 3808 and 3809 models have 1-1/4" (32mm) dial faces while 3908 and 3909 models offer a larger 1-9/16" (40mm) dial face.

3808, 3809, 3908 and 3909 Inch Reading Indicators

Grad	Range	Dial Reading	Dial Diameter	Description	Cat. No.	EDP
.0001"	.008"	0-4-0	1-1/4"	Indicator, two dovetail clamps, case*	3808A	12331
				Indicator with accessories, case**	3808AC	12303
			1-9/16"	Indicator, two dovetail clamps, case*	3908A	12488
				Indicator with accessories, case**	3908AC	12636
.0005"	.030"	0-15-0	1-1/4"	Indicator, two dovetail clamps, case*	3809A	12333
				Indicator with accessories, case**	3809AC	12305
			1-9/16"	Indicator, two dovetail clamps, case*	3909A	12527
				Indicator with accessories, case**	3909AC	12669

* Indicator, .156" contact point, 3/8" and 5/32" dovetail clamps and case

** Indicator, .078" and .156" contact points, 3/8" and 5/32" dovetail clamps, .156" swivel post holder, tool post holder, contact wrench and case

3808, 3809, 3908 and 3909 Metric Reading Indicators

Grad	Range	Dial Reading	Dial Diameter	Description	Cat. No.	EDP
0.002mm	0.2mm	0-100-0	32mm	Indicator, two dovetail clamps, case*	3808MA	12332
				Indicator with accessories, case**	3808MAC	12304
			40mm	Indicator, two dovetail clamps, case*	3908MA	12520
				Indicator with accessories, case**	3908MAC	12656
0.01mm	0.8mm	0-40-0	32mm	Indicator, two dovetail clamps, case*	3809MA	12334
				Indicator with accessories, case**	3809MAC	12307
			40mm	Indicator, two dovetail clamps, case*	3909MA	12563
				Indicator with accessories, case**	3909MAC	12673

* Indicator, 4mm contact point, 9.5mm and 4mm dovetail clamps and case

** Indicator, 2mm and 4mm contact points, 9.5mm and 4mm dovetail clamps, 4mm swivel post holder, tool post holder, contact wrench and case

Each inch reading and metric reading 3808, 3809, 3908 and 3909 is offered with a choice of two Graduation/Range/Reading configurations. Features include:

- Precision gear-driven design with smooth, jeweled movement
- Frictionally adjustable contact point reverses automatically, always maintaining clockwise hand rotation
- Meets or exceeds ANSI/ASME accuracy specifications
- High contrast, easy-to-read dials with white background for inch and yellow for metric

3909A

3909MA

Electronic Indicators

2900 Electronic Indicators

RANGES UP TO .5"/1" AND 12MM/25MM
AGD GROUP 2

The 2900 Electronic Indicators are available in a choice of configurations to meet a range of requirements. Innovative True Absolute Sensor Technology minimizes the chance of data loss for exceptional reliability. Built with IP67 protection and renowned Starrett quality, they maintain their reliability in hostile shop environments.

2900 Electronic Indicators - Inch/Metric .375" Stem: #4-48 UNF Thread							
Range		Resolution		Accuracy			
in	mm	in	mm	in	mm	Cat. No.	EDP
.5"	12mm	.00005"	0.001mm	±.00012"	±0.003mm	2900-1	09980
.5"	12mm	.0001"	0.001mm	±.00012"	±0.003mm	2900-2	09981
1"	25mm	.0005"	0.01mm	±0.001"	±0.03mm	2900-3-1	09963
.5"	12mm	.0005"/.0001"/.00005"	0.01mm/0.001mm	±0.001"	±0.03mm	2900-4	09983
1"	25mm	.0005"	0.01mm	±0.001"	±0.03mm	2900-5-1	09967
.5"	12mm	.0005"/.0001"/.00005"	0.01mm/0.001mm	±.00012"	±0.003mm	2900-6	09985
2900 Electronic Indicators - Inch/Metric 8mm Stem: M2.5 x 0.45 Thread							
.5"	12mm	.00005"	0.001mm	±.00012"	±0.003mm	2900-1ME	09975
1"	25mm	.0005"	0.01mm	±0.001"	±0.03mm	2900-3ME-25	09975
.5"	12mm	.0005"/.0001"/.00005"	0.01mm/0.001mm	±.00012"	±0.003mm	2900-4ME	09976
1"	25mm	.0005"	0.01mm	±0.001	±0.03mm	2900-5ME-25	09978
.5	12mm	.0005"/.0001"/.00005"	0.01mm/0.001mm	±0.00012"	±0.003mm	2900-6ME	09979
2900 Electronic Indicators - Metric Only 8mm Stem: M2.5 x 0.45 Thread							
	12mm		0.001mm		±0.003mm	2900-1M	09986
	25mm		0.01mm		±0.03mm	2900-3M-25	09964
	12mm		0.01mm/0.001mm		±0.003mm	2900-4M	09988
	25mm		0.01mm		±0.03mm	2900-5M-25	09968
	12mm		0.01mm/0.001mm		±0.003mm	2900-6M	09990

2900 Electronic Indicators - Accessories			
Cat. No.	EDP	Spindle Thread	Description
PT99543	00004	4-48	Top lift lever for 2900 Electronic Indicators (English)
PT99556	73065	M2.5X	Top lift lever for 2900 Electronic Indicators (metric)

Features

- Intuitive design and layout – easy to learn and use
- Positive, tactile-feel button activation
- Long battery life
- CE compliant
- Data output on all models
- Choice of Basic, Standard and Advanced feature levels
- One micron resolution available
- Selectable resolution models available
- Fixed ratio measurement systems available
- Metric-only versions available
- Compatible with 25 Indicator backs
- IP67 compliant

IP Protection

An IP number is composed of two numbers, the first referring to protection against solid objects and the second against liquids.

First number 6: Totally protected against dust

Second number 7: Protection against submersion in water under standardized conditions of pressure for 30 minutes

IP67

Electronic Indicators

2700 Wisdom® Electronic Indicators

The 2700 Wisdom Electronic Indicator is one of the most versatile of the electronic indicators. All indicators feature a glass scale design with an unsurpassed accuracy of ± two resolutions when measuring from a known standard. All have rugged, sealed enclosures as well.

Features

- 8 resolutions and 4 measuring ranges available
- Plus or minus travel direction
- Zero the tool at any position of the spindle
- Rotating bezel
- Auto Off after 10 minutes of non-use
- Three power sources - operate by battery, A/C adaptor or through data port
- Output jack allows data transmission

F2720AD

F2730IQ

2700 Wisdom Electronic Indicators - Inch/Metric .375" Stem: #4-48 UNF Thread							
Range		Resolution		Accuracy			
in	mm	in	mm	in	mm	Cat. No.	EDP
1"	25mm	.001"/.0005"/.0001"/.00005"	0.02mm/0.01mm/0.002mm/0.001mm	±.0001"	±0.002mm	F2730IQ	49509
1"	25mm	.001"/.0005"/.0001"	0.02mm/0.01mm/0.002mm/0.001mm	±.0002"	±0.004mm	F2730-1IQ	49516
2"	50mm	.001"/.0005"/.0001"	0.02mm/0.01mm/0.002mm	±.0002"	±0.004mm	F2740IQ	49510
4"	100mm	.001"/.0005"/.0001"	0.02mm/0.01mm/0.002mm	±.0002"	±0.004mm	F2750IQ	49511
0.6"	15mm	.001"/.0005"/.0001"/.00005"	0.02mm/0.01mm/0.002mm/0.001mm	±.0001"	±0.002mm	F2720AD	49500
0.6"	15mm	.001"/.0005"/.0001"	0.02mm/0.01mm/0.002mm	±.0002"	±0.004mm	F2720-1AD	00043
1"	25mm	.001"/.0005"/.0001"/.00005"	0.02mm/0.01mm/0.002mm/0.001mm	±.0001"	±0.002mm	F2730AD	49501
1"	25mm	.001"/.0005"/.0001"	0.02mm/0.01mm/0.002mm	±.0002"	±0.004mm	F2730-1AD	00045
2"	50mm	.001"/.0005"/.0001"	0.02mm/0.01mm/0.002mm	±.0002"	±0.004mm	F2740AD	49502
4"	100mm	.001"/.0005"/.0001"	0.02mm/0.01mm/0.002mm	±.0002"	±0.004mm	F2750AD	49503
2700 Wisdom Electronic Indicators - Inch/Metric 8mm Stem: M2.5 x 0.45 Thread							
1"	25mm	.001"/.0005"/.0001"/.00005"	0.02mm/0.01mm/0.002mm/0.001mm	±.0001"	±0.002mm	F2730IQM	49513
1"	25mm	.001"/.0005"/.0001"	0.02mm/0.01mm/0.002mm	±.0002"	±0.004mm	F2730-1IQM	09992
2"	50mm	.001"/.0005"/.0001"	0.02mm/0.01mm/0.002mm/0.001mm	±.0002"	±0.004mm	F2740IQM	49514
4"	100mm	.001"/.0005"/.0001"	0.02mm/0.01mm/0.002mm	±.0002"	±0.004mm	F2750IQM	49515
0.6"	15mm	.001"/.0005"/.0001"/.00005"	0.02mm/0.01mm/0.002mm/0.001mm	±.0001"	±0.002mm	F2720ADM	49504
0.6"	15mm	.001"/.0005"/.0001"	0.02mm/0.01mm/0.002mm	±.0002"	±0.004mm	F2720-1ADM	09993
1"	25mm	.001"/.0005"/.0001"/.00005"	0.02mm/0.01mm/0.002mm/0.001mm)	±.0001"	±0.002mm	F2730ADM	49505
1"	25mm	.001"/.0005"/.0001"	0.02mm/0.01mm/0.002mm	±.0002"	±0.004mm	F2730-1ADM	09994
2"	50mm	.001"/.0005"/.0001"	0.02mm/0.01mm/0.002mm	±.0002"	±0.004mm	F2740ADM	49506
4"	100mm	.001"/.0005"/.0001"	0.02mm/0.01mm/0.002mm	±.0002"	±0.004mm	F2750ADM	49507

Electronic Indicators

3600 Electronic Indicators

AGD GROUP 2
RANGES UP TO .500" AND 12.7MM

The 3600 Electronic Indicators have simple, powerful, easy-to-use functions, all at an attractive price. Versions are available for inch/metric and metric only.

Inch/mm					
Range		Resolution			
Inch	mm	Inch	mm	Cat. No.	EDP
.500	12.7	.0005	0.01	3600-5	68813
Metric-Only					
	12.7		0.01	3600M-5	68918
Accessory					
Description				Cat. No.	EDP
SR44 Battery				PT61918	67169

Features

- Large, easy-to-read LCD
- Range: .500" or 12.7mm
- Resolution: .0005" or .01mm
- Power On/Off button
- Reverse travel (± control indicates direction)
- Zero setting at any position
- Long battery life
- 3/8" diameter stem for inch/mm model (8mm on metric-only model)
- 4-48 spindle thread on inch/mm model (M2.5 X .45 thread on metric-only model)
- Lug-on-center back with additional flat back
- Dust cap
- Plastic storage case with clear cover

Special Function Indicators

Countersink Gages

687 COUNTERSINK GAGE 82º
688 COUNTERSINK GAGE 90º
689 COUNTERSINK GAGE 100º

Starrett Countersink Gages are offered in three different angles so that the gage sets on the angular side of the countersink, as opposed to a chamfer gage which sets on the top edge of the chamfer.

This gage directly reads the large diameter of the countersink in .002" or 0.05 mm increments. A set master ring is furnished with each gage for calibration and setting. Press the button on top of the indicator to firmly depress the gage head into the countersink. When the gage is removed, the indicator reading is held in place until the reset button is activated.

All ground surfaces are of hardened tool steel. Indicators are AGD design.

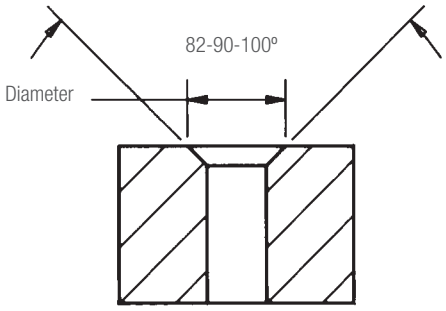

687, 688, 689

Inch Reading Countersink Gages						
	82º Angle		90º Angle		100º Angle	
Range	Cat. No.	EDP	Cat. No.	EDP	Cat. No.	EDP
.020-.170"	687-1Z	63698	688-1Z	63702	689-1Z	63706
.160-.360"	687-2Z	63699	688-2Z	63703	689-2Z	63707
.360-.560"	687-3Z	63700	688-3Z	63704	689-3Z	63708
.560-.780"	687-4Z	63701	688-4Z	63705	689-4Z	63709
Millimeter Reading Countersink Gages with Yellow Dials						
0.5-4.3mm	687M-1Z	65003	688M-1Z	65007	689M-1Z	65011
4-9mm	687M-2Z	65004	688M-2Z	65008	689M-2Z	65012
9-14.2mm	687M-3Z	65005	688M-3Z	65009	689M-3Z	65013
14.2-19.8mm	687M-4Z	65006	688M-4Z	65010	689M-4Z	65014
Check Gage Stand for Chamfer, Countersink and Hole Gages						
Description					Cat. No.	EDP
8-3/16" H x 6" W x 4" D (212 x 150 x 100mm) Hold Downs - 5" (125mm) on Center – 1/4" (6.3mm) Holes					695	63875

Also available with electronic indicators. Please specify.

687

688

689

687-3Z Countersink Gage with 695 Check Stand with F2720-4IQ Electronic Indicator